4/29 Walton Crescent Abbotsford, NSW

2 1 1

Prime Location with Water Views

Located in the highly sought after Abbotsford Peninsula and just a short stroll from the water's edge is this pristine 2 bedroom apartment.

Just move straight in to this beautifully presented apartment boasting modern well appointed kitchen, large bathroom, internal laundry, built ins in both bedrooms plus split system air conditioning as well as ceiling fans. The spacious living area flows out to a large balcony with beautiful views of the bay.

Positioned in one of Abbotsford's most sought after streets and close to all amenities including, public transport, parks, local shops, ferry wharf and the Bay.

Features Include:
- 2 Large bedrooms with built-ins + internal laundry
- Separate tiled dining area
- Spacious lounge flowing to sunny balcony with water views
- Well appointed kitchen, large modern bathroom, air-con
- Small low maintenance block with lock up garage
- Located close to Bay, parks, shops and transport

Price: DEPOSIT TAKEN
Available Date: 2022-02-21

Costa Athanassiou Emanuel Koumis
0402 644 121

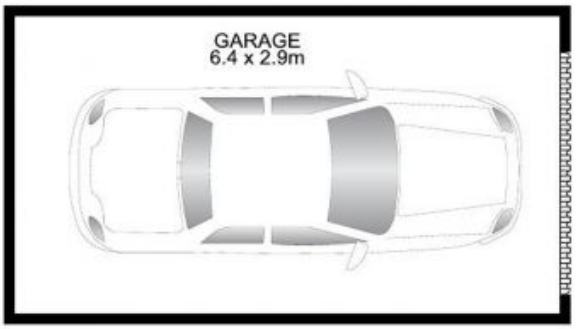

PLANS SHOWN ONLY INDICATIVE OF LAYOUT. DIMENSIONS ARE APPROXIMATE.

N

4/29 Walton Cres

ABBOTSFORD

time EST — 1979